airmotiveengineeringcorp.

2100 Mannix | San Antonio, TX 78217
t: 210.820.2450 | f: 210.820.2451 | e: solutions@aecorp.aero

AEC is recognized for Quality Management System Compliance to ISO 9001:2000.

TDS No.:	**06-03**
Date Issued:	04/27/2006
Revision:	4 (07/30/10)
Page:	1 of 11

AE Fuel Injection System, Model AE400-1A1A

1.0 **Subject:** AE Fuel Injection System, Model AE400-1A1A. Illustrated Parts List, Installation, Adjustment and Test Procedures.

2.0 **General Description:** An EXPERIMENTAL (EXP™) fuel injection system for 4-cylinder, air cooled, opposed engines (compare to the Lycoming 320/360 cu. in. design) that incorporate the AE Cold Induction System sold by Engine Components, Inc. (ECi®).

3.0 **Reference:** Data and instructions contained in this Technical Data Sheet (TDS) are a supplement to the information contained in the AE Mechanical Fuel Injection System Installation and Operating Manual, p/n M242.

4.0 **Safety Information:** The following special attention notices are used in this Technical Data Sheet to notify and advise the user of the product that certain actions or procedures may be dangerous to the user or result in improper fuel system adjustment

CAUTION

Caution is used to indicate the presence of a hazard which will or can cause minor injury or property damage if the notice is ignored.

WARNING

Warning advises that a potential hazard exists and denotes actions and procedures that must be followed exactly to either eliminate or reduce the hazard and to avoid serious personal injury or prevent future safety problems with the product.

DANGER

Danger is used to indicate the presence of a hazard that will result in severe personal injury, death or property damage if the notice is ignored.

5.0 **Engine Application and Performance Curves:** (See charts on the following page. Call for information regarding other applications.)

DANGER

Verify that the AE Fuel Injection System model and the engine on which the fuel system will be installed are compatible. If in doubt contact the factory for guidance. Incompatibility cannot be corrected by field adjustment and may result in engine performance that could lead to personal injury or death.

6.0 **AN Fuel Pump Drive: Illustrated Parts List and Installation Instructions**

6.1 General: The AE Fuel Injection System mounts on an accessory housing that is designed to accommodate an AN fuel pump drive (Figure 1-A). Field modification of an accessory housing that is designed for use with a diaphragm type fuel pump is not approved due to the critical dimensions that must be maintained to ensure proper functioning of the AN style fuel pump.

6.2 Pump Drive Assembly (Figure 1-A and B): Install the idler gear shaft on the inside of the accessory housing and secure with lockplate and two ¼-20 hex head screws. Torque as required (Figure 1-B). Lubricate capscrews before assembly to obtain proper fastener preload. Place the fuel pump idler gear on the idler gear shaft. Install the fuel pump drive adapter gasket on the outside of the accessory housing followed by the fuel drive adapter. Before proceeding further, verify that the idler gear shaft has been correctly installed by inserting the fuel pump driven gear into the fuel drive adapter and check for gear mesh. Figure 1-A contains illustrations of proper gear mesh. Incorrect gear mesh can be corrected by removing the idler gear shaft, rotating it 180° and re-installing the shaft. Once proper gear mesh has been verified, check the torque on the capscrews and safety them by bending the lock tabs securely against two flats of the hex head. Lubricate the idler shaft OD and the idler gear bushing with engine oil prior to final assembly on the engine.

7.0 **Fuel System: Illustrated Parts List and Installation Instructions**

7.1 General: It is recommended that the components of the fuel system be installed on the eligible engine in a sequence that begins with Figure 2 and ends with Figure 5-A. Note that torque values for all fasteners are listed in the far right hand column on the Parts Lists, Figures 2 thru 5-B. It is important that proper torque procedures are observed during assembly.

7.2 Fuel Pump and Vapor Separator Assembly (Figure 1-A): Before attaching the Fuel Pump to the fuel pump drive assembly, apply moly grease to the male drive spline that goes into the female coupling on the fuel pump. Attach the pump using properly lubricated fasteners specified in the Parts List, Figure 1-B, and torque to the required value.

7.3 Fuel Manifold Valve Assembly (Figure 2): If not already attached, attach the Manifold Valve to the bracket as shown in the illustration. Next, attach the bracket assembly to the crankcase. Lubricate fasteners before assembly and use a calibrated torque wrench with the proper torque values in order to obtain proper fastener preload. Safety wire fasteners as shown in the illustration.

7.4 Air Throttle Body and Fuel Metering Unit (Figure 3): Attach the Throttle Body using properly lubricated fasteners specified in the Parts List contained in Figure 3. Tighten capscrews in a crisscross pattern to 35-40 in/lb. Then tighten capscrews in a cross pattern to the final torque value of 70-80 in/lb. Safety wire the capscrews in pairs ensuring that the safety wire does not interfere with throttle lever movement.

5.0 Engine Application and Performance Curves

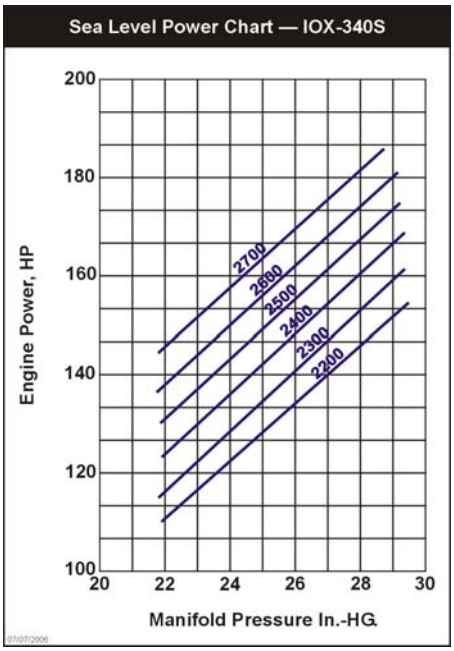

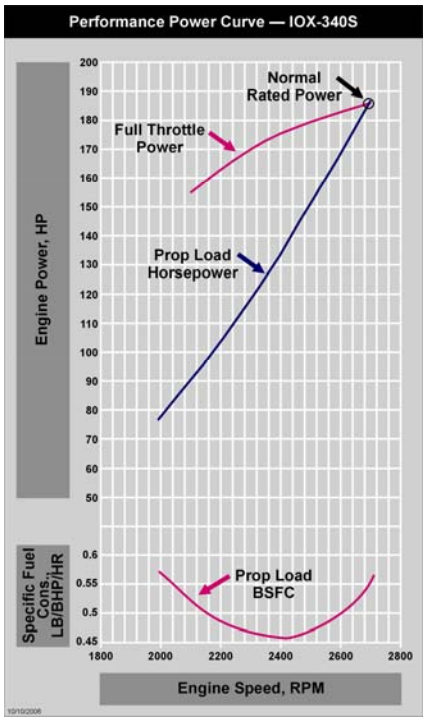

7.5 Fuel Injector Nozzles (Figure 4): Install fuel nozzles in cylinders 1 through 4 after applying Loctite 76732 Anti Seize Lubricant to the pipe threads in accordance with instruction contained in Figure 4. Torque fuel nozzles to the value shown in the far right hand column of the Parts List contained in Figure 5-B.

7.6 Fuel Injection Lines (Figure 5-A): Install fuel injection lines to connect the fuel nozzles to the Fuel Manifold Valve. Torque fuel injection line fittings to the values shown in the far right hand column of the Parts List contained in Figure 5-B.

WARNING

Fuel injection lines supplied with the AE Fuel Injection System have been pre-formed to fit each installation and must not be bent or deformed. In order to prevent fatigue failure due to vibration, the fuel injection lines must be securely clamped to the push rod tubes and crankcase using clamps supplied with the fuel injection system. Assemble in a configuration that allows for engine movement during flight. Fuel injection lines must not interfere with engine cowl or cooling baffles at any point. Do not attach any other components such as fluid lines, ignition leads or electrical wires to the fuel injection lines.

7.7 Fuel Hose Lines (Figure 5-A): Attach the fuel hose lines, 1) Between the fuel pump and the Throttle Body and, 2) Between the Throttle Body and the Manifold Valve (Note that this fuel hose must be routed through a grommeted hole in the aluminum cylinder baffle, P/N AE100061). Torque fuel hose fittings to the values shown in the far right hand column of the Parts List contained in Figure 5-B.

WARNING

Flexible fuel hoses must be properly clamped and supported to prevent excess flexing and/or contact with electrical wires, the exhaust system, or other parts that could cause chafing or failure. Clamps must be placed in such a way that normal movement of the engine on the flexible engine mounts does not transmit improper loads to either the flexible hoses or the fittings to which they are attached.

8.0 **Post Installation/Maintenance Adjustment Parameters:**

8.1 General: Adjustment procedures are contained in documents listed in Section 3.0, “Reference”, above. For the Engine Applications listed in Section 5.0 above, the following adjustment parameters are recommended:

CAUTION

Do not use airframe cockpit gauges when checking and adjusting fuel pressures against the requirements. The Fuel Injection Calibration Kit (AE115) sold by ECi is recommended.

WARNING

The procedures and requirements provided in the AE Fuel Injection System Manual and in the above matrix apply to the TITAN® EXP™ IOX-340S/IOX-360 Series kit engines as configured by Engine Components Inc. If field modifications are made to the AE configured engine, testing must be conducted to establish appropriate pressure and flow requirements.

8.2 AE Fuel Injection Systems are factory calibrated but may require final adjustments in each particular installation as described in Section V, paragraph 5.3, “Adjustment and Test,” in the AE Fuel Injection System Manual. If factory settings have been changed for any reason prior to installation, proceed as follows. Before starting the engine, turn the three fuel adjustment screws clockwise (CW) until they are fully seated; but do not overtighten. Next, turn the screws counter clockwise (CCW) a number of turns corresponding to the information shown in Table 8.2 below. Then follow the procedures described in Section 5, par. 5.3 of the AE Fuel Injection System Manual.

8.3 If the fuel system is not functioning properly after implementing the procedures detailed above, proceed to Section VI, “Troubleshooting”, in the AE Fuel Injection System Manual.

8.1 TITAN® EXP IOX-340S "Stroker"/IOX-360 Series Engines					
Idle And Full Power Fuel Pressure and Flows*					
Engine Throttle Setting	**Engine RPM**	**Un-metered Pump Pressure (Psig)**	**Metered Nozzle Pressure (Psig)**	**Fuel Flow (Gal./Hr.) (Approx.)**	**EGT (F°) @ Take Off Power**
Idle	750 - 800	6 - 8	NA	NA	NA
Full Throttle	2700 +/- 50	24.5	20.0	16.2 – 17.0	1225 - 1275

** NOTE: Fuel pressures must be checked using external, calibrated instrumentation such as the AE Fuel Injection System Calibration Kit (p/n AE115 which is available from ECi) or equivalent. The AE115 kit contains instructions for use.*

8.2 TITAN®EXP IOX-340S "Stroker"/360 Series Engines	
APPROXIMATE INITIAL FUEL ADJUSTMENTS (for reference only)	
Fuel Adjustment Screw Locations*	**CCW Turns**
Adjustable Orifice Screw (Fuel Pump)	6.75
Low Pressure Relief Valve (Fuel Pump)	4.75
Idle Mixture Adjustment Screw (Throttle Body)	0.5

** See the AE Fuel Injection System Manual for illustrations showing the location of these adjustment locations.*

AE FUEL PUMP ASSEMBLY AND DRIVE INSTALLATION

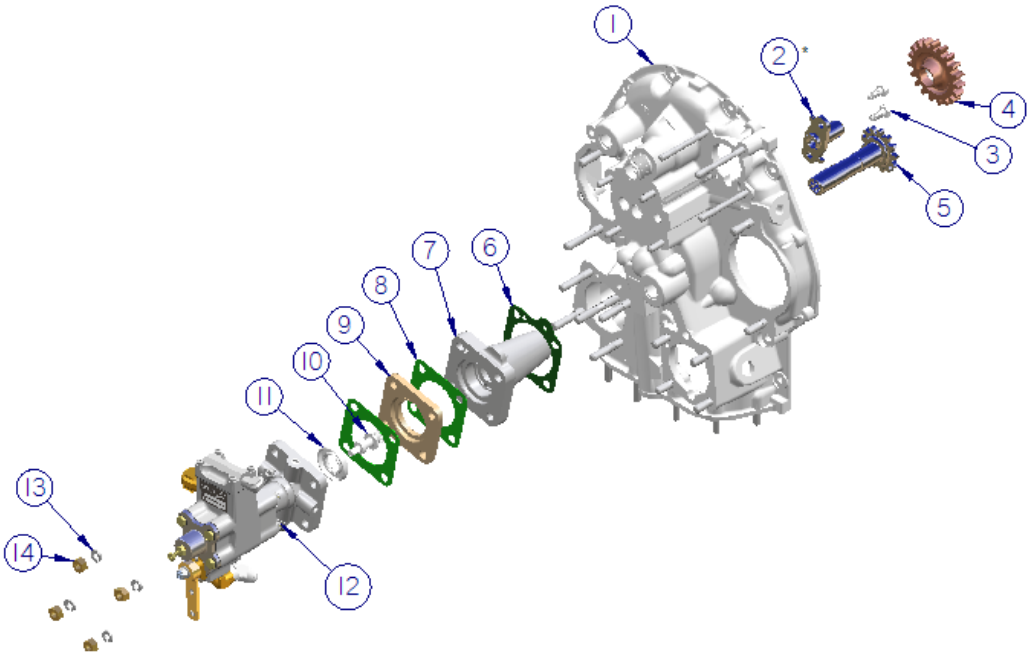

* - INSTALL IDLER SHAFT & GEAR WITH PROPER ROTATION ANGLE AND GEAR MESH (SEE DETAILS)

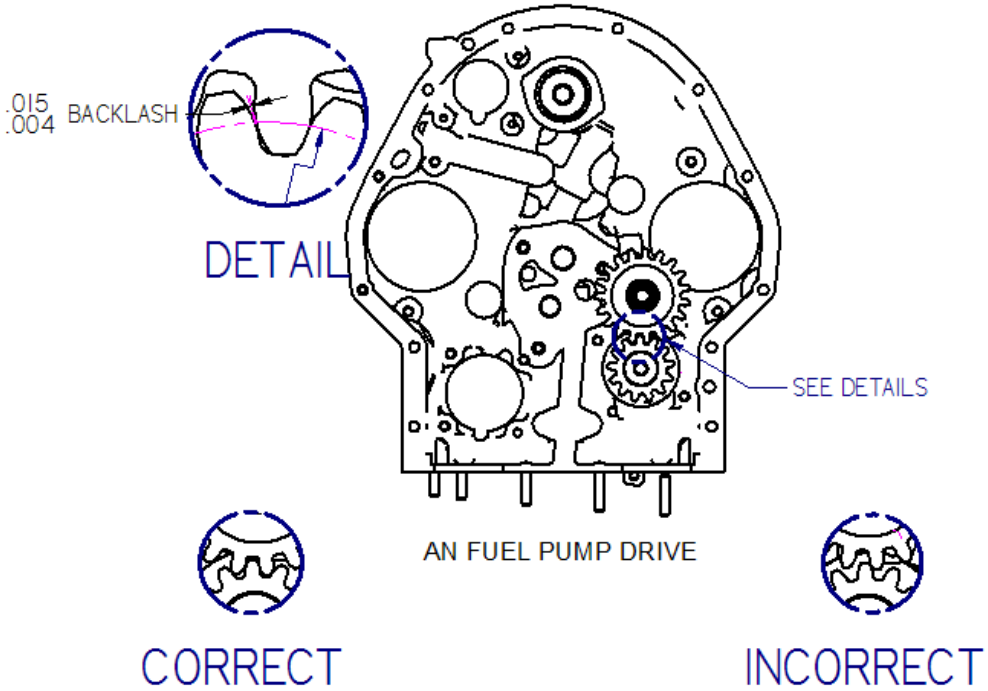

AN FUEL PUMP DRIVE

FIGURE 1-A

AE FUEL PUMP ASSEMBLY AND DRIVE INSTALLATION PARTS LIST

Item No.	Part Number	Description	Qty.	Torque (in.-lbs.)
1	AEL65144	Assembly, Accessory Case	1	-
2	AEL72230	Shaft, Idler Gear, Fuel Pump	1	-
3	AE8001H4-0.63	Bolt, Hex. 1/4-20UNC	2	70-80
4	AEL72231	Gear Assembly, Idler, Fuel Pump	1	-
5	AEL75924	Gear, Drive, Fuel Pump	1	-
6	AEL69164	Gasket, Fuel Pump Adapter	1	-
7	AEL69159	Adapter Assembly, Fuel Pump	1	-
8	AEL1691C	Gasket, Fuel Pump	2	-
9	AE100052	Spacer, Fuel Pump	1	-
10	AE100033	Shaft, Fuel Pump	1	-
11	AELSTD213	Seal, Oil	1	-
12	AE100034	Assembly, Fuel Pump	1	-
13	AE51415-5	Washer, Lock	4	-
14	AE9885-5	Nut, Plain, Hex. 5/16-18 UNC	4	144-180

FIGURE 1-B

AE MANIFOLD VALVE ASSEMBLY AND BRACKET INSTALLATION

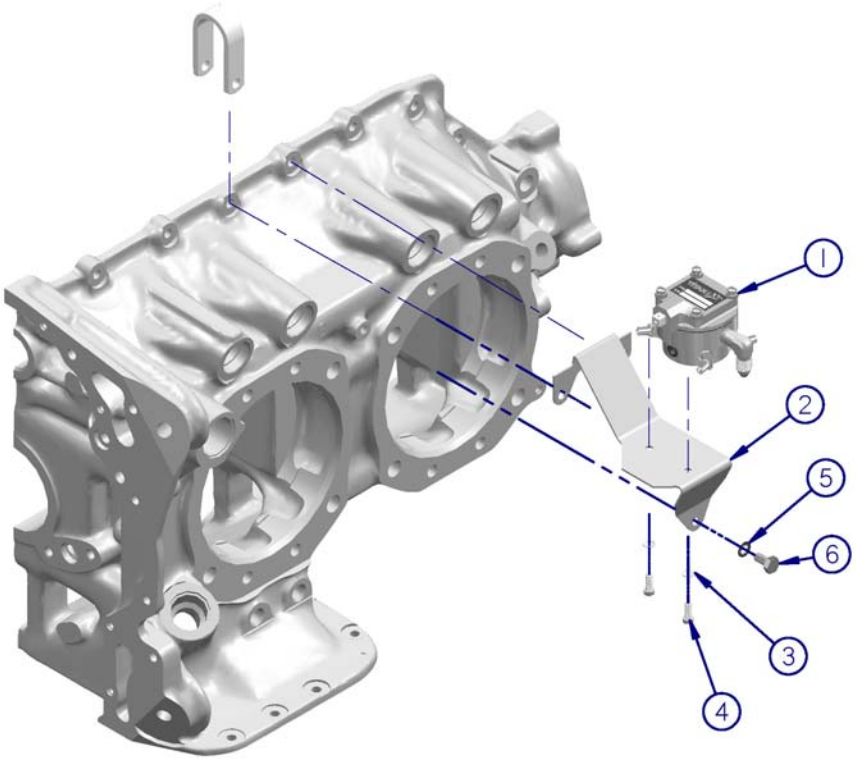

Item No.	Part Number	Description	Qty.	Torque (in.-lbs.)
1	AE100102	Valve, Fuel Manifold	1	-
2	AE100035	Bracket, Fuel Manifold	1	-
3	AE51413-3	Washer, Internal Star	2	-
4	AE8007H3-0.50	Screw, Slotted, Fillister Hd., 10-24UNC	2	15-20 *
5	AE51413-4	Washer, Lock, Internal Teeth	1	-
6	AE8001-4-0.50	Bolt, Hex. 1/4-20 UNC x 0.50 Long	1	40-50

*- Safety wire (Ø.032") two screws together

FIGURE 2

AE THROTTLE VALVE ASSEMBLY INSTALLATION

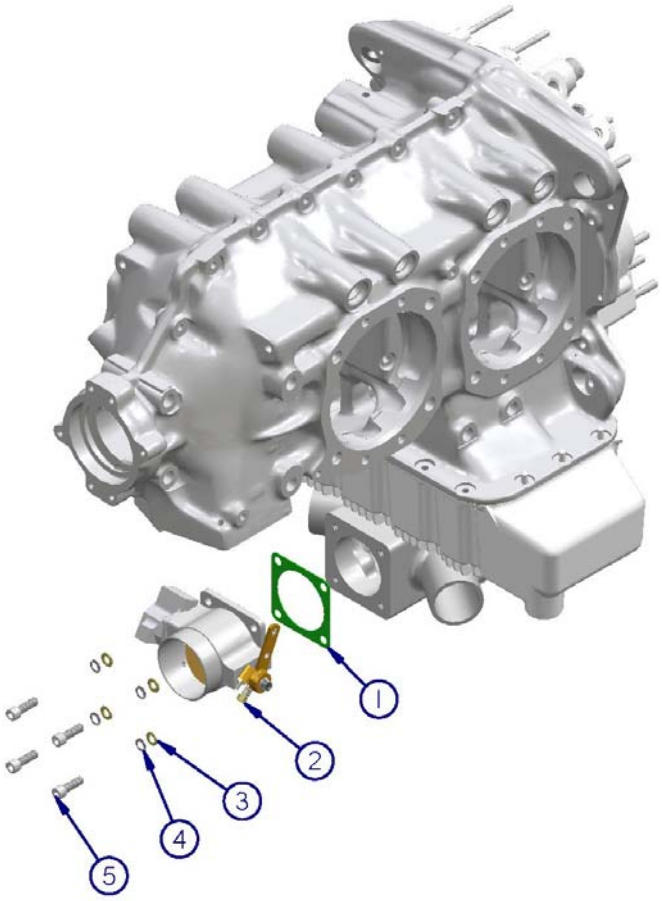

Item No.	Part Number	Description	Qty.	Torque (in.-lbs.)
1	AEL66224	Gasket	1	-
2	AE100044	Assembly, Throttle	1	-
3	AE51412-5	Washer, Flat	4	-
4	AE100104	Washer, Belleville, Serrated	4	-
5	AE100111	Bolt, 5/16-18 UNC, Allen Hd.	4	70-80

FIGURE 3

AE FUEL INJECTOR NOZZLE

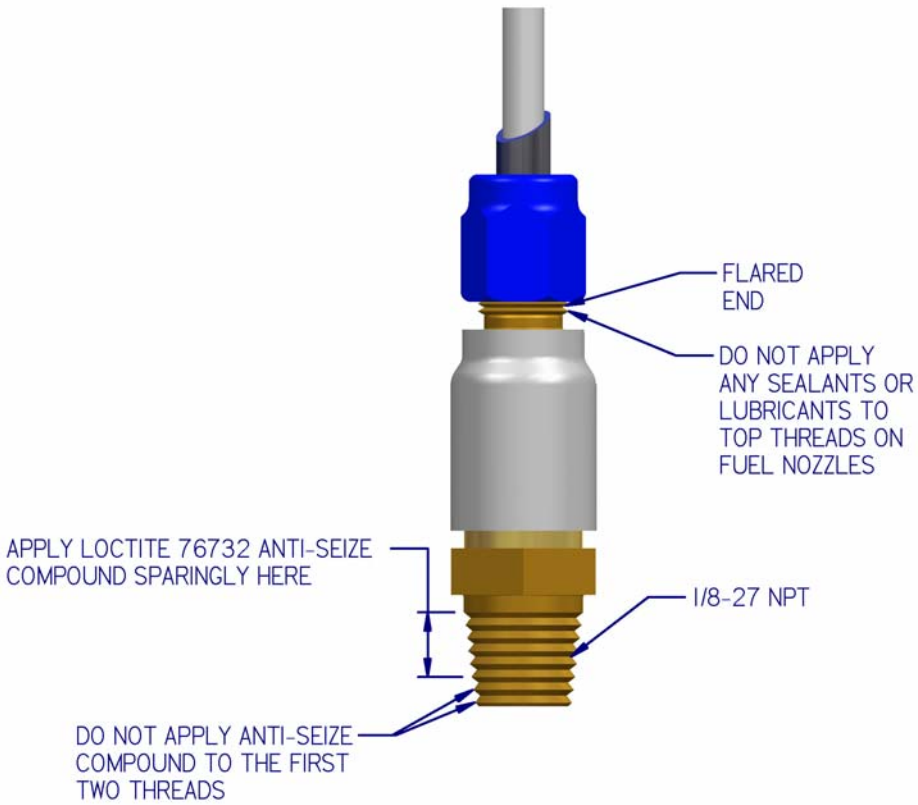

FIGURE 4

AE FUEL INJECTION SYSTEM

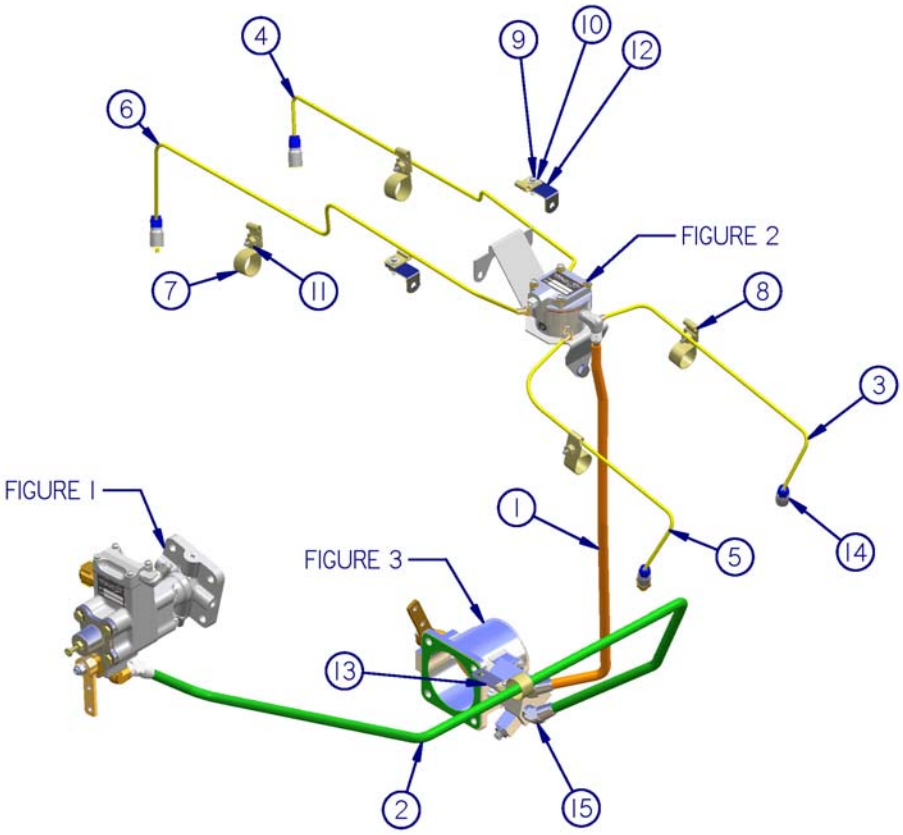

FIGURE 5-A

AE400-1A1A FUEL INJECTION SYSTEM INSTALLATION PARTS LIST

Item No.	Part Number	Description	Qty.	Torque (in.-lbs.)
1	124F001-4CR0172	Hose	1	135-190
2	124F001-4CR0300	Hose	1	135-190
3	AE100090	Tube Assembly, Fuel Injection, Cyl. 1	1	Manifold end 50-60 Nozzle end 40-45
4	AE100091	Tube Assembly, Fuel Injection, Cyl. 2	1	Manifold end 50-60 Nozzle end 40-45
5	AE100092	Tube Assembly, Fuel Injection, Cyl. 3	1	Manifold end 50-60 Nozzle end 40-45
6	AE100093	Tube Assembly, Fuel Injection, Cyl. 4	1	Manifold end 50-60 Nozzle end 40-45
7	AE16266-10-75	Clamp	5	-
8	AE16626-10-13	Clamp	6	-
9	AE8006-3-0.63	Screw	7	49
10	AE51412-3L	Washer	14	-
11	AE9896-3	Nut, Plain	7	49
12	AE73136	Bracket, 90°	1	-
13	AE73152	Bracket, Support Clamp	1	-
14	AE627335	Nozzle Assembly, Fuel Injection	4	55-65
15	MS20823-4	Elbow, 45°, Pipe to Flared	2	70-120

FIGURE 5-B